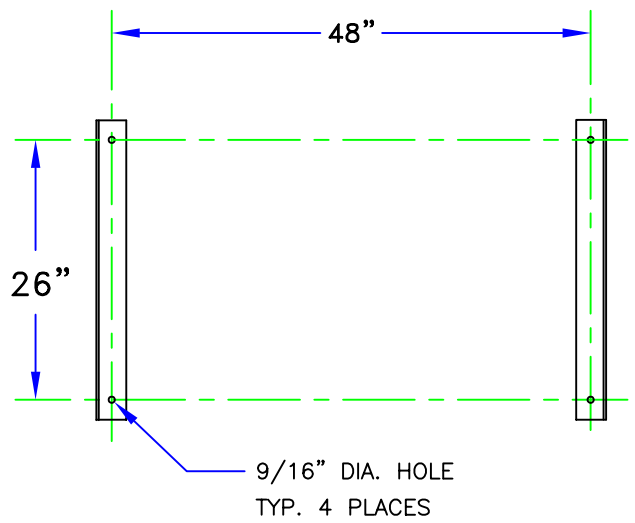

PLAN VIEW

ANCHOR BOLT HOLE PATTERN

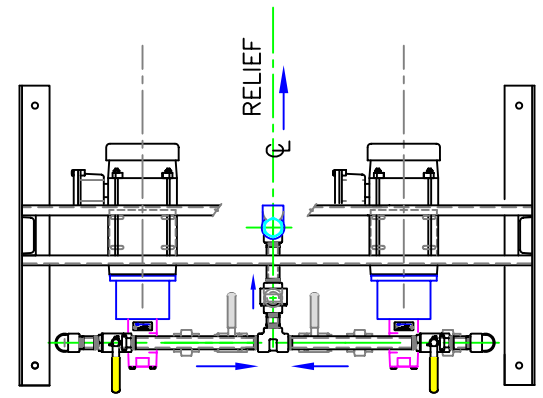

PLAN VIEW

(LESS STARTER BOX FOR CLARITY)

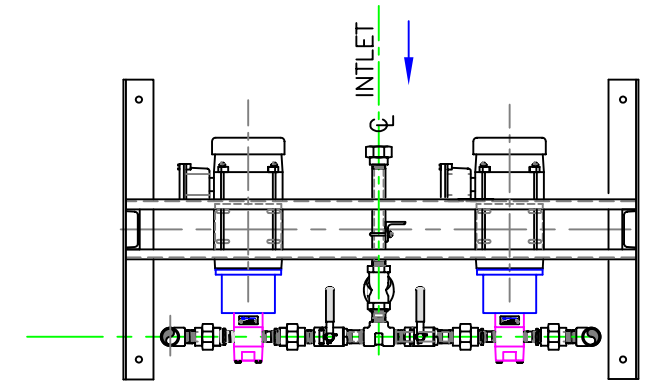

SECTION VIEW "A–A"

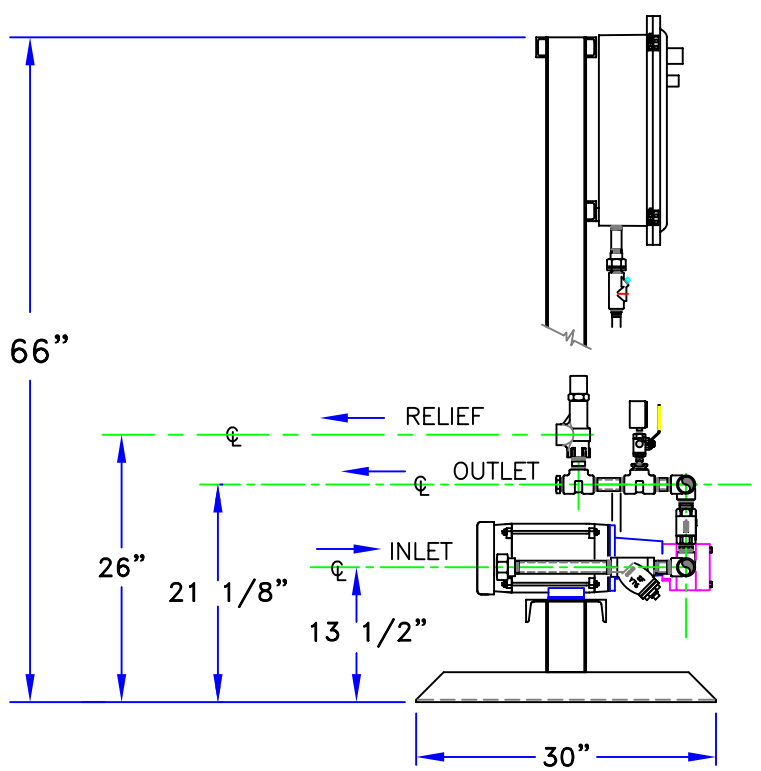

SECTION VIEW "B–B"

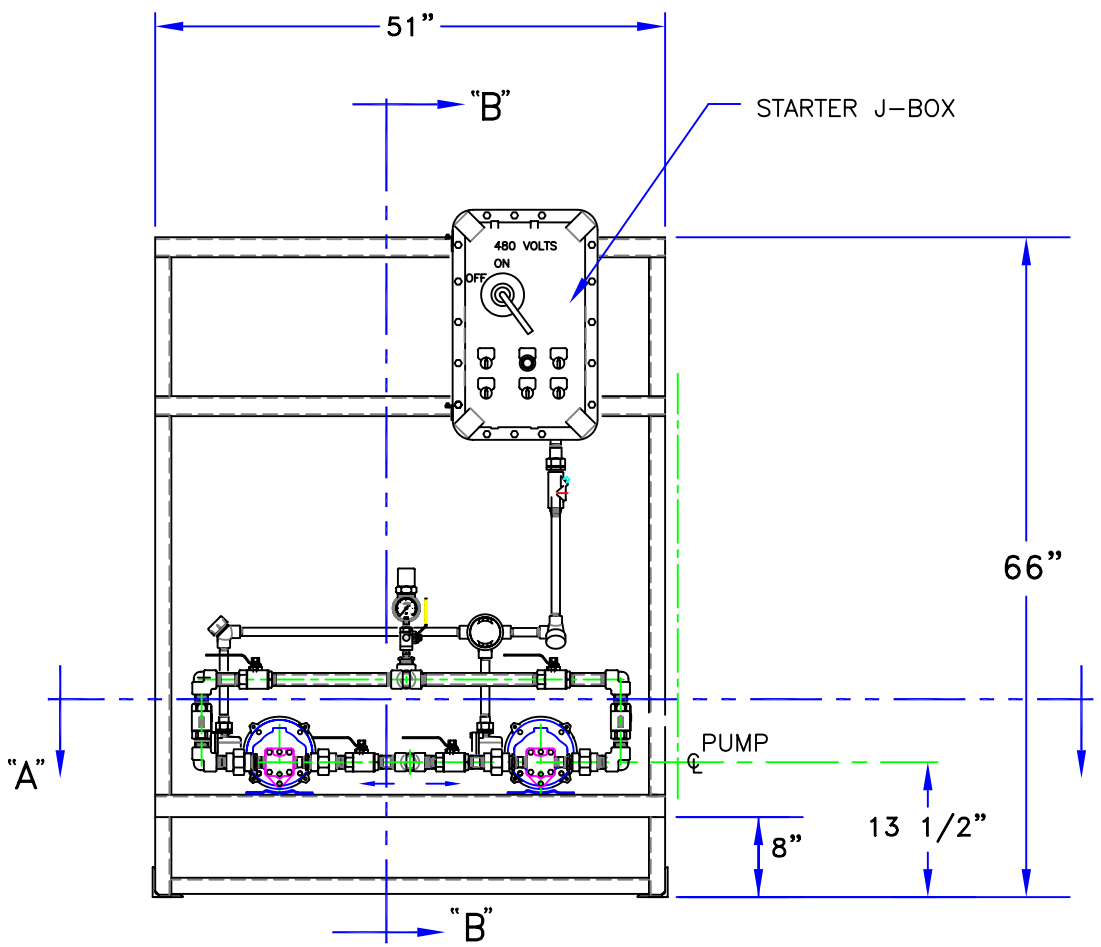

FRONT VIEW

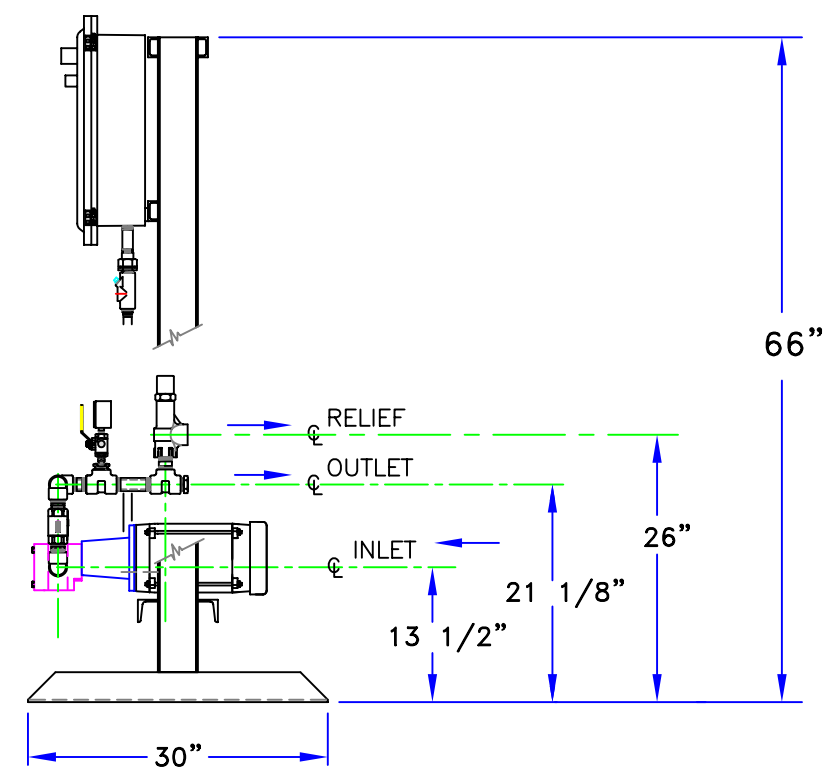

RIGHT SIDE ELEVATION

REVISIONS				
No.	REVISION DESCRIPTION	DATE	DWN	CHK

Chemtec

Chemtec Energy Services, Inc.
11745 Cude Cemetery Road
Willis, Texas 77318

SCALE		APPROVALS		
DRAWN BY LLOYD	DATE 07–09–06			
CHECK BY				

DUAL PUMP RACK ASSEMBLY

SIZE	DRAWING NUMBER	REV
	DPSKD–07–07–06–1	